Design and Modelling of a 750 Watt Switched Reluctance Motor

Research Paper

By

Nisarg Makwana

B.Tech , NIT Surat

May-Jul 2019

Under the Supervision

of

Dr. Karuna Kalita

Center for Energy

Indian Institute of Technology Guwahati

July 2019

Abstract

Switched Reluctance Machines are receiving significant attention from industries in the last decade. They are extremely inexpensive, reliable and weigh less than other machines of comparable power outputs. Although the design principles of the machine are available as a concatenation of many different sources, the need for a unified, step-by-step design procedure from first principles of electromagnetics is an absolute requirement. This dissertation discusses a procedure that can be applied by engineers with a basic background in electromagnetics. Subsequent to the design of the machine, existing finite element software can do the analysis of the machine. However, this is a laborious process and the need for an analytical method is preferable to verify the design procedure before the final verification. A prototype machine has been developed as an example of the design process to verify the analysis procedure using comsol multiphysics 5.2 software and the torque and power values are thus verified using analytical calculations on MATLAB R2018a Software.

Contents

Abstract 2

Chapter1:-Introduction 4

1.1 Introduction 4

1.2 Background 4

Chapter 2: - Principle of Operation of SRM 5

Chapter 3: - Stator and Rotor pole angle selection 8

Chapter 4: - Inductance for Aligned position 10

Chapter 5: - Inductance for Unaligned position 12

5.1 Flux Path 1 12

5.2 Flux Path 2 14

5.3 Flux Path 3 16

5.4 Flux Path 4 18

5.5 Flux Path 5 20

5.6 Flux Path 6 22

5.7 Flux Path 7 23

Chapter 6: - Inductance Vs Flux path plot 24

Chapter 7: - Magnetic Flux Linkage for different configurations in a SRM analyzed by Comsol 25

7.1 Fully Unaligned Position 25

7.2 Quarter Aligned Position 26

7.3 Half Aligned Position 27

7.4 Three-Quarter Aligned Position 28

7.5 Fully Aligned Position 29

Chapter 8: - Calculation of Average Torque and Power 30

Conclusion:- 31

References 32

Chapter1:-Introduction

1.1 Introduction

The Switched Reluctance Motor (SRM) drives for industrial applications are of recent origin. The Torque expression is the key to understand any machine which is derived from the first principles. The Torque expression requires a relationship between machine flux linkages or inductance and the rotor position; for sake of brevity and to illustrate the basic theory, only unsaturated operations is considered here. The machine operation in all its four quadrants of torque vs. speed is derived from the inductance vs. rotor position characteristics of the machines, the dynamic equivalent circuit for SRM is formulated. Its use may be limited in design but it has a larger impact on the high performance controller derivations and understanding. Also the single phase machines have applications in low-performance but high-volume applications. An SRM capable of linear motion is introduced and its principle of operation and many of its configuration studies here.

1.2 Background

Since 1969, a variable reluctance motor has been proposed for variable speed applications. The origin of this motor can be traced back to 1842, but the reinvention is possible due to advent of inexpensive, high-power switching devices. Even being a synchronous machine it has its novel features. It has wound field coils of dc motor for its stator windings and has no coils or magnets on its rotor, both Stator and Rotor has salient poles, hence the machine is referred to as a doubly salient machine.

The poles are said to be excited whenever the rotor is diagonally opposite stator poles. Here in a magnetic circuit the rotating member prefers to come to the minimum reluctance position at the instance of excitation. While two rotor poles are aligned the stator poles there is another rotor poles which becomes unaligned with respect to a different pair of stator poles. Then this stator poles are excited to bring the rotor poles in alignment giving the rotor a rotating force and rotor is rotated hence the production of torque and power, involves switching of currents into stator windings when there is a variation of reluctance; therefore, this variable speed motor drives are referred as a SRM Drive.

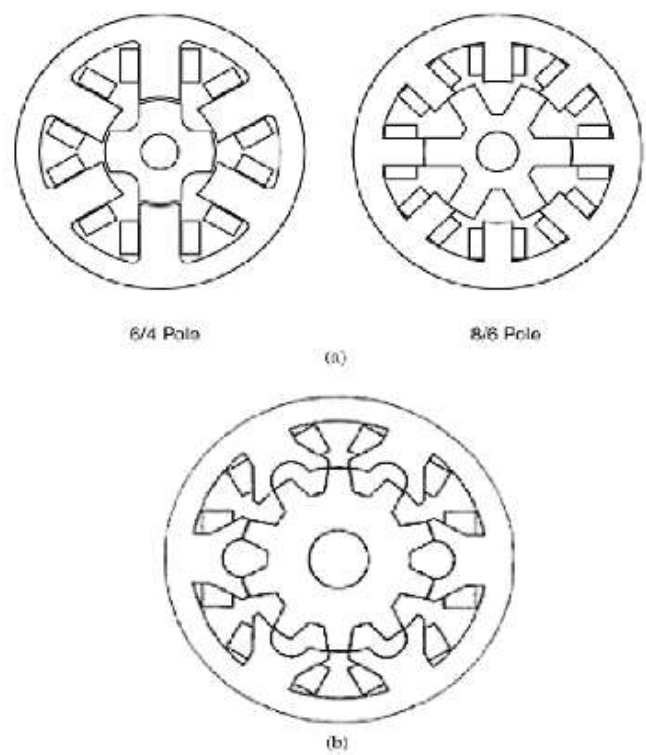

Figure 1.2.1 Switched reluctance motor configurations. (a)One tooth per pole. (b)Two teeth per pole (12/10 poles)

Chapter 2: - Principle of Operation of SRM

The Principle of electromechanical energy conversion in solenoid explains torque production in a Switched Reluctance motor. As shown, a solenoid has N turns, and when it is excited with a current i , the coil sets up a flux Φ. Increasing the excitation current will make armature to move towards the yoke, which is fixed. The flux vs. magnetomotive force(MMF) is plotted for two values of air gap, x_1 and x_2, where $x_1 > x_2$, are linear as reluctance of the air gap is dominant

$$W_e = \int eidt = \int idt \frac{dN\Phi}{dt} = \int Nid\Phi = \int Fd\Phi \tag{1.1}$$

Where e is induced emf and F is the mmf. This input electrical energy, W_e, is equal to the sum of energy stored in the coil, W_f, and energy converted into mechanical work, W_m. It is written as:

$$W_e = W_f + W_m \tag{1.2}$$

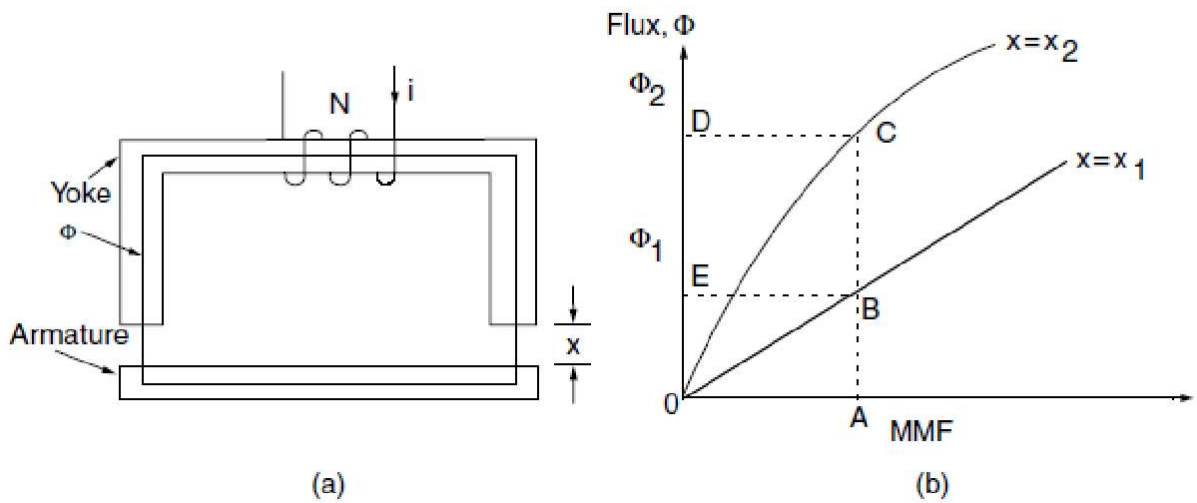

Figure 2.1 Solenoid and its characteristics. (a) A solenoid. (b)Flux v. mmf characteristics.

When mechanical work is done ,as for armature starting from x_1, the stored field energy is equal to input electrical energy given by above Eq.(1.1). The corresponding area OBEO in Figure b. The complement of the field energy, termed co-energy, is given by area OBAO in Figure b and Mathematically expressed as $\int \Phi dF$. For position x_2 of the armature, the field energy corresponds to area OCDO and the co-energy is given by area OCAO. For incremental changes, Eqn. (1.2) is written as:

$$\delta W_e = \delta W_f + \delta W_m \tag{1.3}$$

For a constant excitation of F_1 by the operating point A in Figure 1.3b, the various energies are derived as:

$$\delta W_e = \int_{\phi_1}^{\phi_2} F_1 d\phi = F_1(\phi_2 - \phi_1) = \text{area(BCDEB)} \tag{1.4}$$

$$\delta W_e = \delta W_{f|_{x=x_2}} - \delta W_{f|_{x=x_1}} = \text{area}(OCDO) - \text{area(OBEO)} \tag{1.5}$$

Thus Incremental mechanical energy is derived as:

$$\delta W_m = \delta W_e - \delta W_f = area(\text{OBCO}) \tag{1.6}$$

Also is area between both curves for given magnetomotive force. It can be written in terms of electromagnetic torque and change in rotor position as:

$$\delta W_m = T_e \delta\theta \tag{1.7}$$

Where T_e is electromagnetic torque and $\delta\theta$ is the incremental rotor angle. Hence, the electromagnetic torque is given by:

$$T_e = \frac{\delta W_m}{\delta\theta} \tag{1.8}$$

For constant excitation, incremental work is equal to rate of change of co-energy, W_f', which is nothing but the complement of the field energy. Hence, the incremental mechanical work done is written as:

$$\delta W_m = \delta W_f' \tag{1.9}$$

Where

$$W_f' = \int \Phi dF = \int \Phi d(\text{Ni}) = \int (\text{N}\Phi)\,\text{di} = \int \lambda(\theta, \text{i})\,\text{di} = \int L(\theta, \text{i}) i di \tag{1.10}$$

Where the inductance, L , and Flux linkages, λ ,are function of rotor position and current. This change in energy occurs between two rotor positions, θ_2 and θ_1. Hence, the air gap torque is represented in function of rotor position and current is

$$T_e = \frac{\delta W_m}{\delta\theta} = \frac{\delta W_f'}{\delta\theta} = \left.\frac{\delta W_f'(\text{i}, \theta)}{\delta\theta}\right|_{i=cons\tan t} \tag{1.11}$$

If the inductance is linearly varying with rotor position for a given current, which in general is not the case in practice, then the torque can be derived as:

$$T_e = \frac{dL(\theta,\mathrm{i})}{d\theta} \cdot \frac{i^2}{2} \tag{1.12}$$

Where

$$\underline{\frac{dL(\theta,\mathrm{i})}{d\theta} = \left.\frac{L(\theta_2,i) - \mathrm{L}(\theta_1,i)}{\theta_2 - \theta_1}\right|_{i=cons\tan t}} \tag{1.13}$$

And differential inductance can be considered as torque constant in $N \cdot m / A^2$.

Chapter 3: - Stator and Rotor pole angle selection

The stator and rotor pole angle selection form a crucial part of the design process. The standard design normally has the stator pole arc angle βs smaller than the rotor pole angle βr. The constraints on the values of pole arc angles is briefly described here. They are as follows:

1. The stator pole arc angle is less than the rotor pole arc angle, i.e., βs < βr.
2. The effective torque zone is lesser than the stator pole angle βs but greater than the stroke angle ε. The stroke angle is defined as

$$\varepsilon = \frac{2\pi}{\frac{N_s}{2} N_r}$$

In an 8/6 machine the stroke angle is $15°$. If βs < ε, then there may be some positions in the machine from where the machine may not start. The inductance profile of a phase repeats every $\frac{2\pi}{N_r}$ radians. In the ideal scenario shown as long as the stator and rotor pole arcs do not overlap, the phase inductance remains at the unaligned value Lu. This region occurs between 0 and θ1 where 0 is assumed to be the fully unaligned position. From Figure 3.1(a), it can be observed that from the fully unaligned position,

the rotor has to traverse an angle of $\theta_1 = \frac{\pi}{N_r} - \frac{\beta_s}{2} - \frac{\beta_r}{2}$ under the tip of the stator pole. From position θ1 to position θ2, the rotor and stator pole overlap to some extent and as the rotor traverses this region, there is a steady rise in inductance value. It can be seen clearly in Figure 3.1(b), that the angle $\beta_s = \theta_2 - \theta_1$ and once the rotor reaches position θ2, the poles are completely overlapping. The inductance value at position θ2 is equal to the maximum value La.

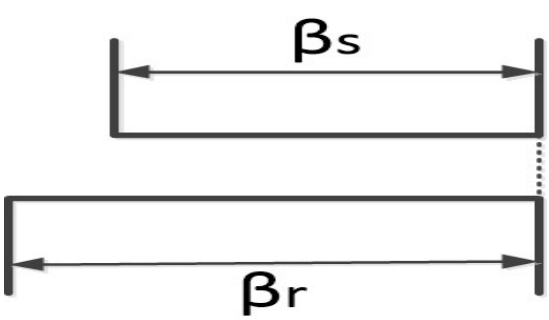

Figure3 (a) Rotor position from unaligned position 0 to ϑ1

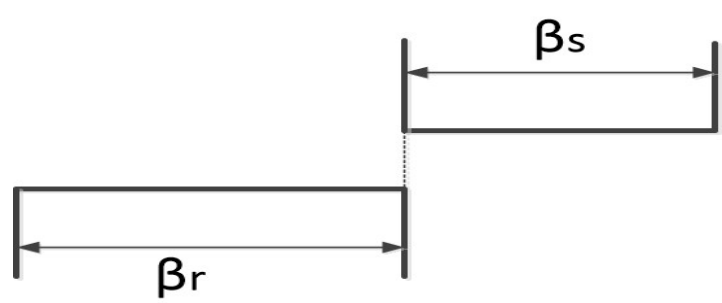

Figure 3(b) Rotor position from position ϑ1 to position ϑ2

From position θ2 to θ3, there is a complete overlap of the rotor and stator poles as seen in Figure 3.1(c) and the inductance value remains constant at the maximum value of La. The angle $\beta_r - \beta_s = \theta_3 - \theta_2$ From position θ3 to position θ4, the rotor and stator pole overlap to some extent

and as the rotor traverses this region, there is a steady decrease in inductance value. It can be seen clearly in Figure 3.1(d), that the angle $\beta_s = \theta_5 - \theta_4$ and once the rotor reaches position θ4, the poles

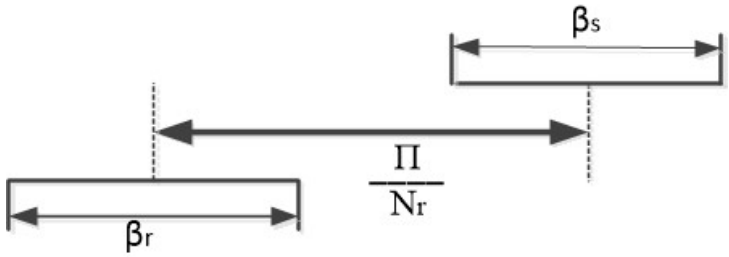

Figure 3(c) Rotor position from position ϑ2 to position ϑ3

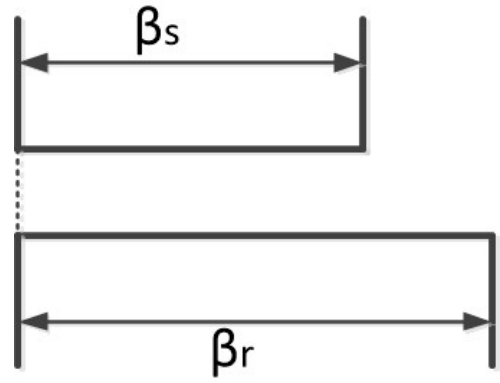

Figure 3(d) Rotor position from position ϑ3 to position ϑ4

are unaligned. The inductance value at position θ4 is equal to the minimum value Lu.

The rotor then has to traverse an angle of reach the fully unaligned position as represented in Figure 3.1(e).

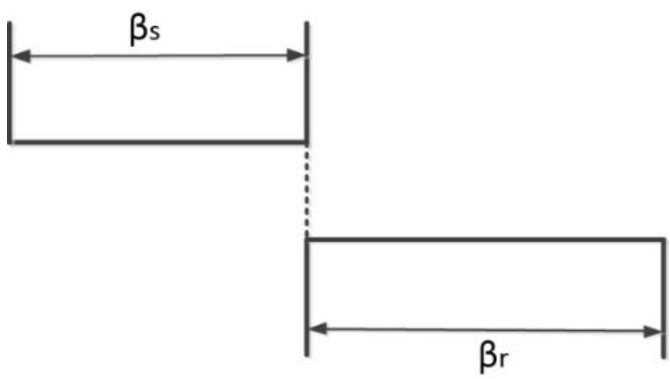

Figure 3(e) Rotor position from position ϑ4 to position ϑ5

Figure 3(a),(b),(c),(d),(e). Schematic representing the traverse of rotor

Chapter 4: - Inductance for Aligned position

Assuming that the stator pole flux density β_s is assumed to be equal to B_s the rest of the machine can be designed. Neglecting leakage and stacking factor, the stator pole area A_s can be written as,

$$A_s = \frac{DL\beta_s}{2} = 525.41mm^2$$

The flux in the stator pole $\varnothing$ is given by

$$\varnothing = \beta_s A_s = 0.78812m\text{mW}b$$

The flux in the yoke y is given by

$$\varnothing_y = \frac{\varnothing}{2} = 0.39406m\text{mW}b$$

The area of the yoke A_y can be set as,

$$A_y = A_s = 525.41mm^2$$

The back iron thickness C is obtained as,

$$C = \frac{A_y}{L} = 0.0099m$$

The stator pole height h_s is given by,

$$h_s = \left(\frac{D_o}{2}\right) - C - \left(\frac{D}{2}\right) = 0.0226m$$

The rotor pole area A_r is given by,

$$Ar = \left(\frac{D}{2} - g\right) L\beta r = 546.18mm^2$$

The rotor pole flux density β_r is given by,

$$Br = \frac{BsAs}{Ar} = 1.4430$$

The area of the rotor core A_{rc} is given by,

$$A_{rc} = \frac{A_s}{1.6} = 328.38mm^2$$

The height of the rotor pole h_{rp} is calculated as,

$$h_{rp} = \left(\frac{D}{2} - CL - \frac{D_{sh}}{2} - \frac{A_{rc}}{L}\right) = 0.0205m$$

Neglecting leakage and fringing, the air-gap area can be approximately written as,

$$A_g = \left(\frac{D}{2} - \frac{CL}{2}\right)\left(\frac{\beta_r + \beta_s}{2}\right)L = 535.90mm^2$$

The flux density in the air-gap B_g is given by,

$$B_g = \frac{A_s B_s}{A_g} = 1.4707$$

The magnetic field intensity of the air-gap H_g is calculated as,

$$H_g = \frac{B_g}{4\pi * 10^{-}7} = 1.1703e+06$$

The flux density in the air-gap B_y is given by,

$$B_y = \frac{A_s B_s}{A_y} = 1.5000$$

The flux density in the air-gap B_r is given by,

$$B_r = \frac{A_s B_s}{A_r} = 1.4430$$

The flux density in the air-gap B_{rc} is given by,

$$B_{rc} = \frac{A_s B_s}{A_{rc}} = 2.4000$$

The magnetic field intensities in the stator pole, stator yoke, rotor pole and rotor core are designated as H_s, H_y, H_r and H_{rc}, respectively. They are obtained from the BH characteristics shown in Figure 2.5 as,

$$H_y = 1195$$
$$H_r = 700$$
$$H_{rc} = 10000$$
$$H_s = H_y = 1195$$

The mean path lengths of various sections are given as follows:

$$l_s = h_s + \frac{C}{2} = 0.0275$$
$$l_g = g = 5.0000e-04$$
$$l_r = \frac{D}{4} - \frac{g}{2} + \frac{h_r}{2} - \frac{D_{sh}}{2} = 0.0159$$
$$l_{rc} = \pi\left(\frac{D}{4} - \frac{g}{2} - \frac{h_r}{2} + \frac{D_{sh}}{2}\right) = 0.0601$$

The mean length l_y for a circular yoke SRM is calculated as,

$$l_y = \pi\left(\frac{D_o}{2} - \frac{C}{2}\right) = 0.1981$$

Now, the total ampere-turns J required for the machine operation at full load can be calculated. The magnetic circuit equation is written as,

$$J = 2\left(H_s l_s + H_g 1_g + H_r l_r\right) + \left(\frac{H_{rc} l_{rc}}{2}\right) + \left(\frac{H_y l_y}{2}\right) = 1.6772e+$$

Since initially the peak current was assumed to be i_p = 12 A, the turns per phase is calculated as,

$$T_{sp} = \frac{J}{i_p} = 139.7657$$

The aligned saturated inductance at maximum current neglecting leakage is calculated as,

$$L_{aligned} = \frac{JB_s A_s}{ip^2} = 0.0092H$$

Chapter 5: - Inductance for Unaligned position

5.1 Flux Path 1

The length of flux gap is given as

$$l_{g1} = \frac{D}{2} - l_g - h_r = 21.56mm$$

Where l_g is the air gap during alignment and h_r is rotor pole height.

The cross section of the flux path at the rotor is obtained as follows;

$$\theta_2 = \frac{\frac{\beta_2(\frac{D}{2} - l_g)}{2}}{(\frac{D}{2} - l_g - h_r)} = 0.227rad$$

θ_3 is derived as;

$$\theta_3 = \frac{1}{2}(\frac{2\pi}{P_r}) - \theta_2 = \frac{\theta_{rp}}{2} - \theta_2 = 0.148rad$$

Where θ_{rp} is the rotor pitch and P_r is the number of rotor poles. The area of cross section on the rotor periphery is

$$A_{r1} = 2\theta_3(\frac{D}{2} - l_g - h_r)L = 338.521mm^2$$

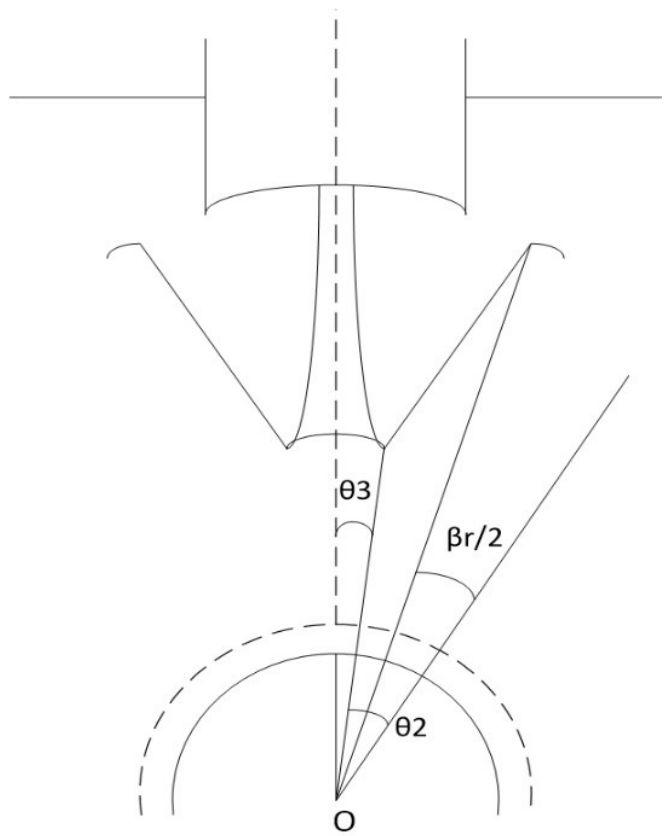

Figure 5.1.1 Flux path 1 in Fully Unaligned Position

And the average area of cross section of flux path l is

$$A_{g1} = \frac{A_{sp1} + A_{r1}}{2} = 103.584mm^2$$

The length of the flux path on each side of the rotor back iron is

$$l_{ry1} = \pi(\frac{D_{sh}}{4} + \frac{D}{4} - \frac{l_g}{2} - \frac{h_r}{2}) = 46.983mm$$

Where D_{sh} is the rotor shaft diameter. The area of cross section of the rotor back iron for flux path is;

$$A_{ry1} = (\frac{D}{2} - l_g - h_r - \frac{D_{sh}}{2})\mathrm{L} = 700.13\,\mathrm{mm}^2$$

The length of the path in the stator is

$$l_{sp1} = h_s = 25.520mm$$

Where h_s is stator pole height and its area is given by;

$$A_{sp1} = \frac{\beta_s DL}{16} = 131.353mm^2$$

The length of the flux path in the stator back iron is

$$l_{sy1} = \frac{\pi(\mathrm{D}_o - \mathrm{b}_{sy})}{2} = \frac{\pi(\mathrm{D} + 2\mathrm{h}_s + \mathrm{b}_{sy})}{2} = 206.276mm$$

Where b_{sy} is the stator back iron thickness. Its area is given by;

$$A_{sy1} = b_{sy}L = 491.84mm^2$$

The inductance contributed by the flux path 1 at unaligned inductance, then, is

$$L_{u1} = \frac{T_{ph} \cdot \phi_1}{i} = \frac{T_{ph}^2}{(2\mathrm{R}_{sp1} + 2R_{g1} + \frac{R_{sy1}}{2} + \frac{R_{ry1}}{2})} = 2.42mH$$

5.2 Flux Path 2

$$OB = \frac{D}{2} = 35.5mm$$

$$\theta_3 = \frac{\beta_s}{4} = 0.0698\text{rad}$$

The coordinates of B and O as origin are

$$(x_1, y_1) = [\frac{D}{2}\sin(\theta_3), \frac{D}{2}\cos(\theta_3)] = (2.476, 35.413)\,\text{mm}$$

The coordinates of C(x2, y2) are found as;

$$OD = (\frac{D}{2} - l_g - \frac{3}{4}h_r) = 24.92\,\text{mm}$$

$$CD = (\frac{D}{2} - l_g)\frac{\beta_r}{2} = 5.152mm$$

$$\theta_4 = \frac{CD}{OD} = 0.207\text{rad}$$

$$\lfloor COA = \theta_5 = \frac{\theta_{rp}}{2} - \theta_4 = 0.128\text{rad}$$

$$(x_2, y_2) = [\text{OD}\sin(\theta_5), \text{OD}\cos(\theta_5)] = (3.187, 24.715)\,\text{mm}$$

The chord BC is, then:

$$BC = \sqrt{(x_2 - x_1)^2 + (y_2 - y_1)^2} = 12.104mm$$

Then, the length of the flux in path 2 may be considered as arc BC. The arc is evaluated by considering an equilateral triangle BCE with the length of each side BC, and the arc is part of the circle centered at E. It is, then:

$$l_3 = ArcBC = [\text{BC}](\frac{\pi}{3}) = 12.675\text{mm}$$

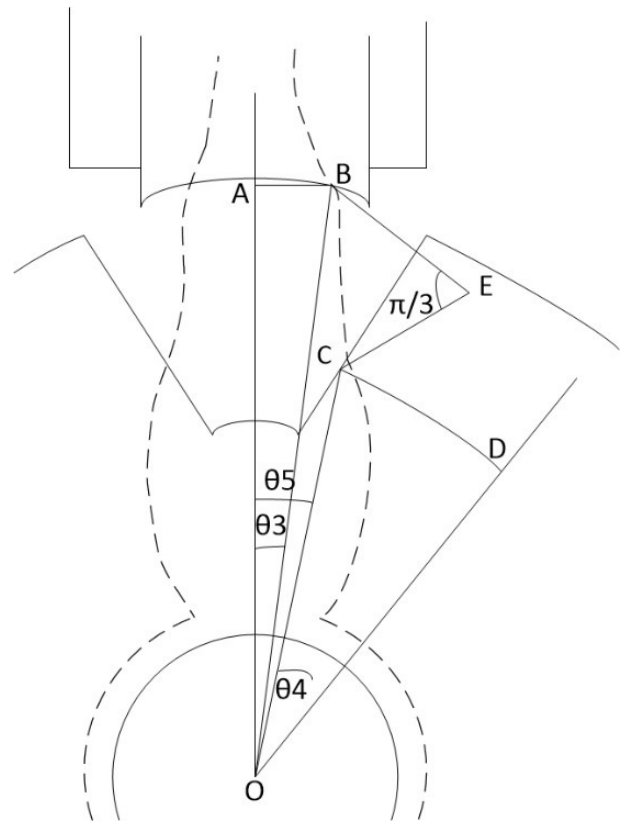

Figure 5.2.1 Flux path 2 in Fully Unaligned Position

The area of cross section of the flux path is calculated as the average of the stator and rotor area of cross section and is given as:

$$A_{g2} = \frac{A_{sp2} + A_{rp2}}{2} = 121.878\text{mm}^2$$

Where

$$A_{sp2} = \frac{1}{2}(\frac{\beta}{2}\frac{D}{2} \cdot \text{L}) = 65.676\text{mm}^2$$

$$A_{rp2} = \frac{h_r}{4}L = 178.08\text{mm}^2$$

The length of the flux path in stator pole is

$$l_{sp2} = h_s = 25.52\text{mm}$$

The area of cross section in stator pole is

$$A_{sp2} = \frac{1}{2}(\frac{D}{2}\frac{\beta_s}{4}\mathrm{L}) = 65.676\mathrm{mm}^2$$

The length of flux path in rotor pole is

$$l_{rp2} = \frac{h_r}{4} = 3.36\mathrm{mm}$$

The length and area of the cross section of the flux path in rotor back iron are

$$l_{ry2} = l_{ry1} = 46.982\mathrm{mm}$$

$$A_{ry2} = A_{ry1} = 700.13\mathrm{mm}^2$$

The length and area of cross section of the flux path of stator back iron are

$$l_{sy2} = l_{sy1} = 206.277\mathrm{mm}$$

$$A_{sy2} = A_{sy1} = 491.84\mathrm{mm}^2$$

Corresponding Reluctance are given as

$$R_{g2} = \frac{l_{g2}}{\mu_o A_{g2}} = 8.2766\mathrm{e{+}04}$$

$$R_{sp2} = \frac{l_{sp2}}{\mu_o A_{sp2}} = 3.0922\mathrm{e{+}05}$$

$$R_{rp2} = \frac{l_{rp2}}{\mu_o A_{rp2}} = 1.5015\mathrm{e{+}04}$$

$$R_{ry2} = \frac{l_{ry2}}{\mu_o A_{ry2}} = 5.3402\mathrm{e{+}04}$$

$$R_{sy2} = \frac{l_{sy2}}{\mu_o A_{sy2}} = 3.3375\mathrm{e{+}05}$$

Now the inductance offered by flux path 2 is

$$\underline{L_{u2} = \frac{2T_{ph}\phi_2}{i} = 2.664\mathrm{mH}}$$

5.3 Flux Path 3

$$OD = (\frac{D}{2} - l_g - \frac{h_r}{4}) = 32.139\text{mm}$$

$$CD = (\frac{D}{2} - 1_g)\frac{\beta_r}{2} = 5.226\text{mm}$$

$$OB = \frac{D}{2} = 35.5mm$$

$$\theta_1 = (\frac{\beta_s}{2} - \frac{5}{64}\beta_s) = \frac{27}{64}\beta_s = 0.1178\text{rad}$$

$$\theta_6 = \frac{CD}{OD} = 0.1626\text{rad}$$

$$\theta_7 = \theta_{rp} - \theta_6 = -0.0055\text{rad}$$

The coordinates of B=

$$(x_1, y_1) = [(OB)\sin(\theta_1), (OB)\cos(\theta_1)]$$
$$= (4.173, 35.254)\,\text{mm}$$

The coordinates of C=

$$(x_2, y_2) = [OD\sin(\theta_7), OD\cos(\theta_7)]$$
$$= (-0.177, 32.138)\,\text{mm}$$

$$chord(\text{BC}) = \sqrt{(x_2 - x_1)^2 + (y_2 - y_1)^2} = 5.351\text{mm}$$

$$l_{g3} = arcBC = chord(\text{BC})(\frac{\pi}{3}) = 5.603\text{mm}$$

$$A_{g3} = \frac{1}{2}(A_{rp3} + A_{sp3}) = 113.669\text{mm}^2$$

The length of the flux path in stator pole is

$$1_{sp3} = h_s = 25.52\text{mm}$$

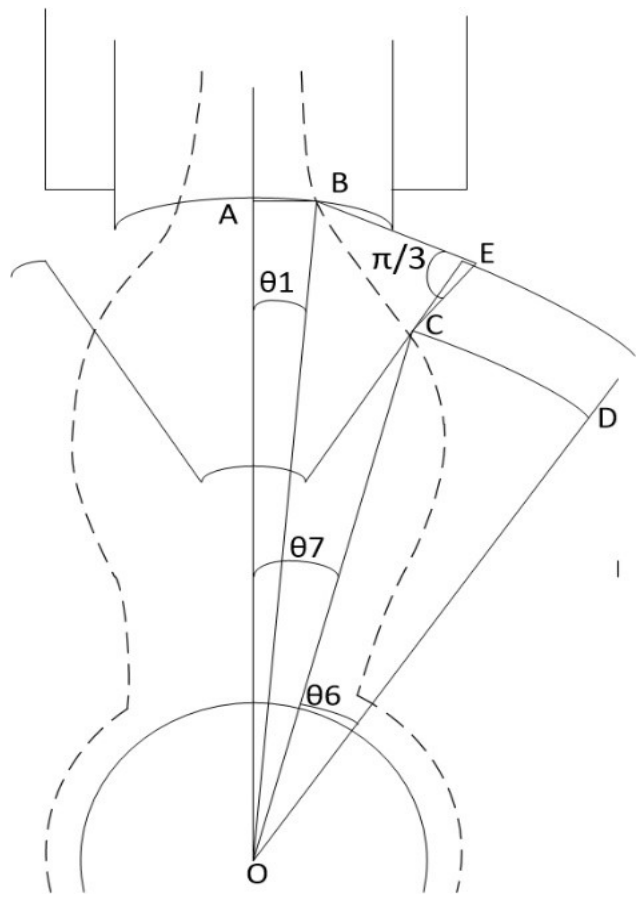

Figure 5.3.1 Flux path 3 in Fully Unaligned Position

The area of cross section in stator pole is

$$A_{sp3} = \frac{3}{8}(\frac{D}{2}\frac{\beta_s}{4}\text{L}) = 49.257\text{mm}^2$$

The length of flux path in rotor pole is

$$l_{rp3} = \frac{3h_r}{4} = 10.08\text{mm}$$

The length and area of the cross section of the flux path in rotor back iron are

$$l_{ry3} = l_{ry1} = 46.982\text{mm}$$

$$A_{ry3} = A_{ry1} = 700.13\text{mm}^2$$

The length and area of cross section of the flux path of stator back iron are

$$l_{sy3} = l_{sy1} = 206.277\text{mm}$$

$$A_{sy3} = A_{sy1} = 491.84\text{mm}^2$$

Corresponding Reluctance are given as

$$R_{g3} = \frac{l_{g3}}{\mu_o A_{g3}} = 7.8420\text{e+04}$$

$$R_{sp3} = \frac{l_{sp3}}{\mu_o A_{sp3}} = 8.2424\text{e+05}$$

$$R_{rp3} = \frac{l_{rp3}}{\mu_o A_{rp3}} = 9.0051\text{e+04}$$

$$R_{ry3} = \frac{l_{ry3}}{\mu_o A_{ry3}} = 1.0676\text{e+05}$$

$$R_{sy3} = \frac{l_{sy3}}{\mu_o A_{sy3}} = 6.6723\text{e+05}$$

Now the inductance offered by flux path 3 is

$$\underline{L_{u3} = \frac{2T_{ph}\phi_3}{i} = 1.206\text{mH}}$$

5.4 Flux Path 4

$$\theta_1 = \frac{\beta_s}{2} = 0.1178\text{rad}$$

Figure 5.4.1 Flux path 4 in Fully Unaligned Position

The coordinates of pole tip B=

$$(x_3, y_3) = [\frac{D}{2}\sin(\frac{\beta_s}{2}), \frac{D}{2}\cos(\frac{\beta_s}{2})]$$
$$= (4.941, 35.155)\,\text{mm}$$

$$OC = (\frac{D}{2} - l_g - \frac{h_r}{8}) = 33.819\text{mm}$$

$$\theta_8 = \frac{\frac{\beta_s}{2}(\frac{D}{2} - l_g)}{(\frac{D}{2} - l_g - \frac{h_r}{8})} = 0.1466\text{rad}$$

The coordinates of C=

$$(x_4, y_4) = [OC\sin(\theta_9), OC\cos(\theta_9)]$$
$$= (-2.299, 33.741)\,\text{mm}$$

$$BC = \sqrt{(x_3 - x_4)^2 + (y_3 - y_4)^2} = 7.376\text{mm}$$

$$l_{g4} = BC = 7.376\text{mm}$$

$$A_{g4} = \frac{1}{2}(A_{rp4} + A_{sp4}) = 139.517\text{mm}^2$$

The length of the flux path in stator pole is

$$l_{sp4} = h_s = 25.52\text{mm}$$

The area of cross section in stator pole is

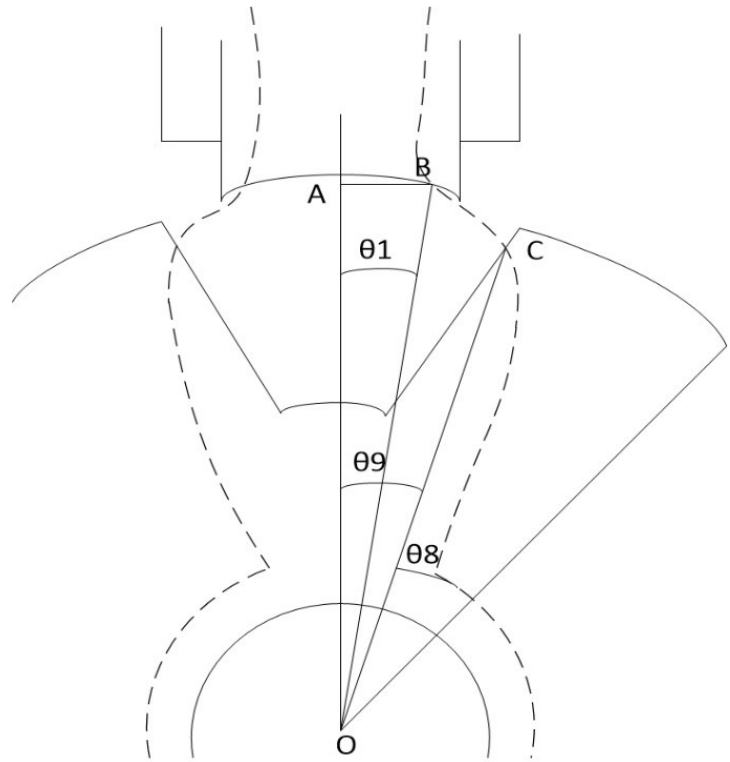

Figure 5.4.1 Flux path 4 in Fully Unaligned Position

$$A_{sp4} = \frac{1}{8}(\frac{D}{2}\frac{\beta_s}{4}L) + \frac{1}{4}\frac{h_s}{4}L = 100.954\text{mm}^2$$

The length of flux path in rotor pole is

$$l_{rp4} = \frac{7h_r}{8} = 11.76\text{mm}$$

$$A_{rp4} = \frac{h_r}{4}L = 178.08\text{mm}^2$$

The length and area of the cross section of the flux path in rotor back iron are

$$l_{ry4} = l_{ry1} = 46.982\text{mm}$$
$$A_{ry4} = A_{ry1} = 700.13\text{mm}^2$$

The length and area of cross section of the flux path of stator back iron are

$$l_{sy4} = l_{sy1} = 206.277\text{mm}$$

$$A_{sy4} = A_{sy1} = 491.84\text{mm}^2$$

Corresponding magnetic flux intensities are given as

$$R_{g4} = \frac{l_{g4}}{\mu_o A_{g4}} = 8.4109\text{e+04}$$

$$R_{sp4} = \frac{l_{sp4}}{\mu_o A_{sp4}} = 4.0216\text{e+05}$$

$$R_{rp4} = \frac{l_{rp4}}{\mu_o A_{rp4}} = 1.0506\text{e+05}$$

$$R_{ry4} = \frac{l_{ry4}}{\mu_o A_{ry4}} = 1.0676\text{e+05}$$

$$R_{sy4} = \frac{l_{sy4}}{\mu_o A_{sy4}} = 6.6723\text{e+05}$$

Now the inductance offered by flux path 4 is

$$\underline{L_{u4} = \frac{2T_{ph}\phi_4}{i} = 1.73\text{mH}}$$

5.5 Flux Path 5

$$x1 = AB = \frac{D}{2} sin\left(\frac{\beta_s}{2}\right) = 4.94\text{mm}$$

$$y1 = OA = \frac{D}{2}\cos\left(\frac{\beta_s}{2}\right) + \frac{5h_s}{32} = 35.155\text{mm}$$

The coordinates of B=

$$(\mathrm{x}_5, \mathrm{y}_5) = [(\frac{D}{2})\sin(\frac{\beta_s}{2}), (\frac{D}{2})\cos(\frac{\beta_s}{2}) + \frac{5\,\mathrm{h}_s}{32}]$$

$$= (4.941, 39.142)\,\text{mm}$$

$$\theta_1 = \tan^{-1}\{\frac{x_5}{y_5 - (\frac{D}{2} - l_g - h_r)}\} = 0.2815\text{rad}$$

$$OC = (\frac{D}{2} - l_g) = 35.499\text{mm}$$

$$\theta_2 = (\frac{\theta_{rp}}{2} - (\frac{7}{16})\beta_r) = 0.2815\text{rad}$$

The coordinates of C=

$$(\mathrm{x}_6, \mathrm{y}_6) = [OC\sin(\theta_2), OC\cos(\theta_2)]$$

$$= (-1.784, 35.455)\,\text{mm}$$

The coordinates of D=

$$(\mathrm{x}_7, \mathrm{y}_7) = [0, (\frac{D}{2} - l_g - h_r)]$$

$$= (0, 22.06)\,\text{mm}$$

$$\mathrm{DC} = \sqrt{(\mathrm{x}_7 - \mathrm{x}_6)^2 + (\mathrm{y}_7 - \mathrm{y}_6)^2} = 13.513\text{mm}$$

$$\mathrm{DB} = \sqrt{(\mathrm{x}_7 - \mathrm{x}_5)^2 + (\mathrm{y}_7 - \mathrm{y}_5)^2} = 17.783\text{mm}$$

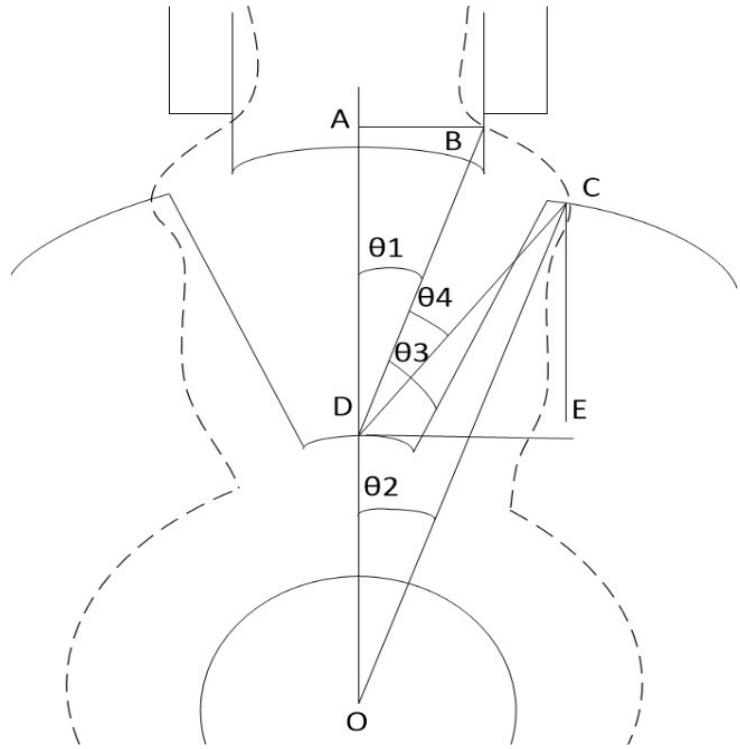

Figure 5.5.1 Flux path 5 in Fully Unaligned Position

$$\theta_3 = \tan^{-1}(\frac{CE}{DE}) = \tan^{-1}(\frac{y_6 - y_7}{x_6}) = \text{-}0.148\text{rad}$$

$$\theta_4 = \frac{\pi}{2} - \theta_3 - \theta_1 = 2.7276\text{rad}$$

$$l_{g5} = \frac{1}{2}(\mathrm{DC} + \mathrm{DB})\theta_4 = 42.682\text{mm}$$

$$A_{g5} = \frac{1}{2}(\mathrm{A}_{rp5} + \mathrm{A}_{sp5}) = 161.426\text{mm}^2$$

The length of the flux path in stator pole is

$$\mathrm{l}_{sp5} = h_s = 25.52\text{mm}$$

The area of cross section in stator pole is

$$A_{sp5} = \frac{3}{4}\frac{h_s}{4}\mathrm{L} = 253.605\mathrm{mm}^2$$

The length of flux path in rotor pole is

$$l_{rp5} = h_r = 13.44\mathrm{mm}$$

$$A_{rp5} = (\frac{D}{2} - 1_g)\frac{\beta_r}{8}L = 69.247\mathrm{mm}^2$$

The length and area of the cross section of the flux path in rotor back iron are

$$l_{ry5} = l_{ry1} = 46.982\mathrm{mm}$$

$$A_{ry5} = A_{ry1} = 700.13\mathrm{mm}^2$$

The length and area of cross section of the flux path of stator back iron are

$$l_{sy5} = l_{sy1} = 206.277\mathrm{mm}$$

$$A_{sy5} = A_{sy1} = 491.84\mathrm{mm}^2$$

Corresponding Reluctance are given as

$$R_{g5} = \frac{l_{g5}}{\mu_o A_{g5}} = 4.206\mathrm{e{+}05}$$

$$R_{sp5} = \frac{l_{sp5}}{\mu_o A_{sp5}} = 1.601\mathrm{e{+}05}$$

$$R_{rp5} = \frac{l_{rp5}}{\mu_o A_{rp5}} = 3.0877\mathrm{e{+}05}$$

$$R_{ry5} = \frac{l_{ry5}}{\mu_o A_{ry5}} = 1.0676\mathrm{e{+}05}$$

$$R_{sy5} = \frac{l_{sy5}}{\mu_o A_{sy5}} = 6.6723\mathrm{e{+}05}$$

Now the inductance offered by flux path 5 is

$$L_{u5} = \frac{2T_{ph}\phi_5}{i} = 1.477\mathrm{mH}$$

5.6 Flux Path 6

$$x_1 = AC = \frac{D}{2} sin\left(\frac{\beta_s}{2}\right) = 4.941\text{mm}$$

$$y_1 = OA = \frac{D}{2}\cos\left(\frac{\beta_s}{2}\right) + \frac{3h_s}{8} = 44.725\text{mm}$$

$$\theta_1 = \sin^{-1}\{\frac{x_1}{(\sqrt{x_1^{\ 2} + y_1^{\ 2}})}\} = 0.110\text{rad}$$

$$\theta_2 = (\frac{2\pi}{8} - \theta_1) = 0.0118\text{rad}$$

$$l_{g6} = (\text{OC})\theta_2 = 23.976\text{mm}$$

$$A_{g6} = \frac{1}{2}(\text{A}_{rp6} + \text{A}_{sp6}) = 338.14\text{mm}^2$$

The length of the flux path in stator pole is

$$\text{l}_{sp6} = \frac{5h_s}{8} = 15.95\text{mm}$$

The area of cross section in stator pole is

$$A_{sp6} = \frac{h_s}{4}\text{L} = 338.14\text{mm}^2$$

The length and area of cross section of the flux path of stator back iron are

$$l_{sy6} = (\frac{D}{2} + h_s + \frac{b_{sy}}{4})(\frac{2\pi}{P_s} - 2\theta_1) = 35.809\text{mm}$$

$$A_{sy6} = A_{sy1} = 491.84\text{mm}^2$$

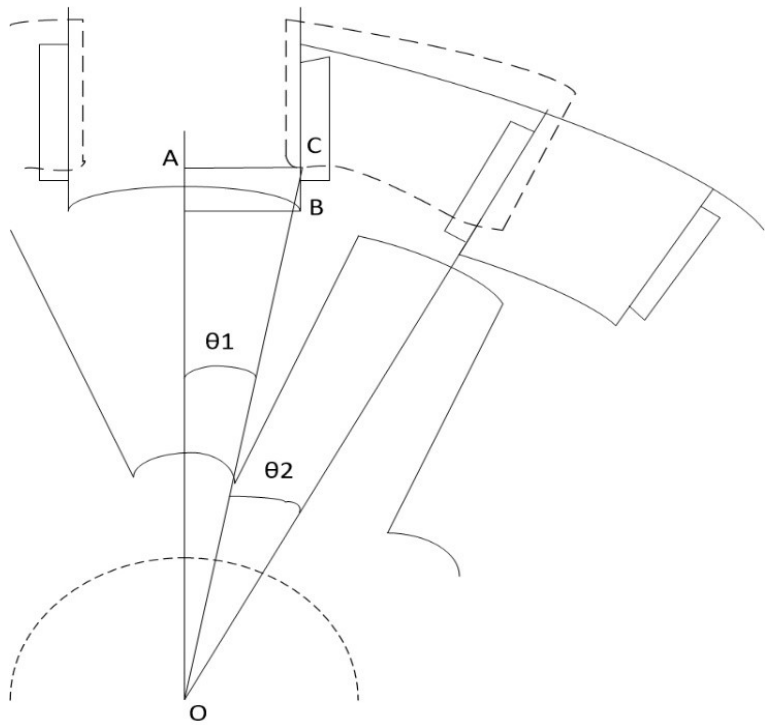

Figure 5.6.1 Flux path 6 in Fully Unaligned Position

Corresponding Reluctance are given as;

$$R_{g6} = \frac{l_{g6}}{\mu_o A_{g6}} = 1.1280\text{e+05}$$

$$R_{sp6} = \frac{l_{sp6}}{\mu_o A_{sp6}} = 7.5043\text{e+04}$$

$$R_{sy6} = \frac{l_{sy6}}{\mu_o A_{sy6}} = 1.1583\text{e+05}$$

Now the inductance offered by flux path 6 is

$$L_{u6} = \frac{4\{\frac{3}{8}(T_{ph}\phi_6)\}}{i} = 2.112\text{mH}$$

5.7 Flux Path 7

$$l_{g7} = \frac{h_s}{4}\frac{\pi}{2} = 574.2\text{mm}$$

$$A_{g7} = \text{A}_{sp7} = 676.28\text{mm}^2$$

The length of the flux path in stator pole is

$$\text{l}_{sp7} = \frac{h_s}{4} = 8.7\text{mm}$$

The area of cross section in stator pole is

$$A_{sp7} = \frac{h_s}{2}\text{L} = 676.28\text{mm}^2$$

The length and area of cross section of the flux path of stator back iron are

$$l_{sy7} = \frac{h_s}{4} + \frac{b_{sy}}{4} = 6.38\text{mm}$$

$$A_{sy7} = A_{sy1} = 491.84\text{mm}^2$$

Corresponding Reluctance are given as;

$$R_{g7} = \frac{l_{g7}}{\mu_o A_{g7}} = 1.351\text{e+06}$$

$$R_{sp7} = \frac{l_{sp7}}{\mu_o A_{sp7}} = 2.047\text{e+04}$$

$$R_{sy7} = \frac{l_{sy7}}{\mu_o A_{sy7}} = 2.064\text{e+04}$$

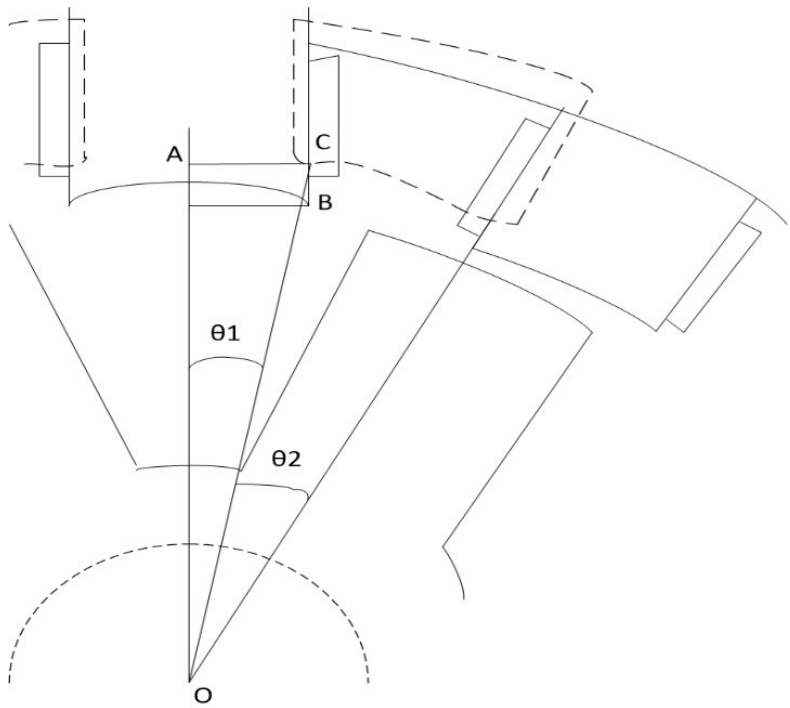

Figure 5.7.1 Flux path 7 in Fully Unaligned Position

Now the inductance offered by flux path 7 is

$$L_{u7} = \frac{2T_{ph}\phi_7}{i} = 2.299\text{mH}$$

Chapter 6: - Inductance Vs Flux path plot

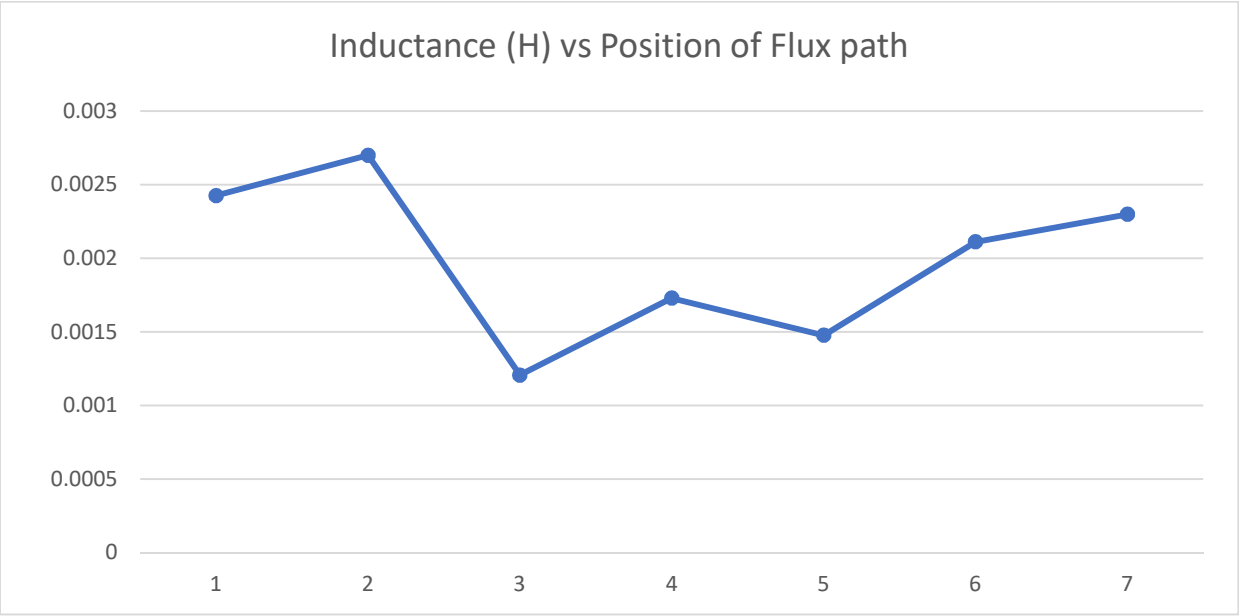

Figure 6.1: -The Flux paths streamline figures are obtained by comsol multi-physics software 5.2 shown as above

Chapter 7: - Magnetic Flux Linkage for different configurations in a SRM analyzed by Comsol

7.1 Fully Unaligned Position

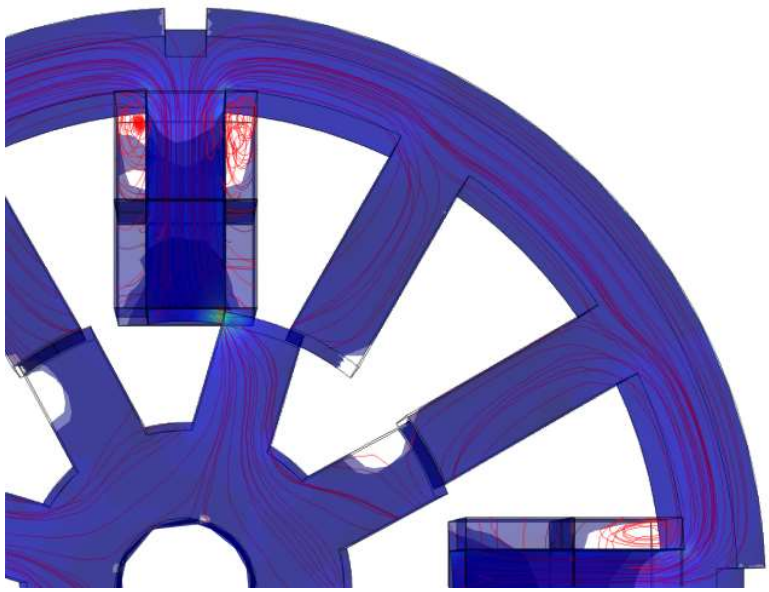

Fig7.1(a) Magnetic flux linkage Partial view for Fully Unaligned Position

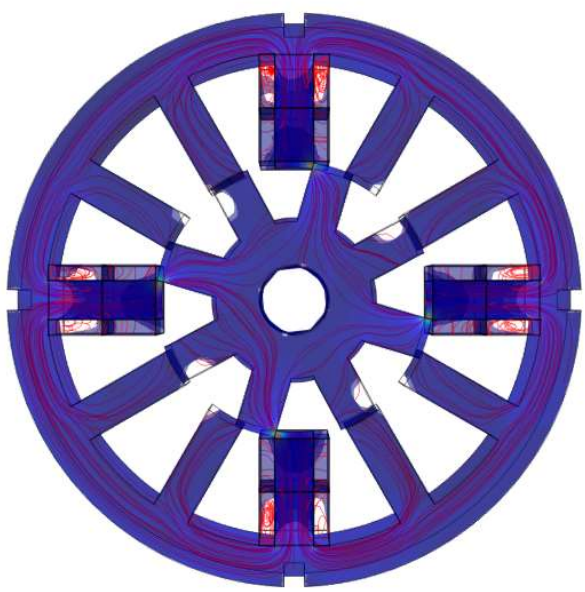

Fig7.1(b) Magnetic flux linkage Full view for Fully Unaligned Position

7.2 Quarter Aligned Position

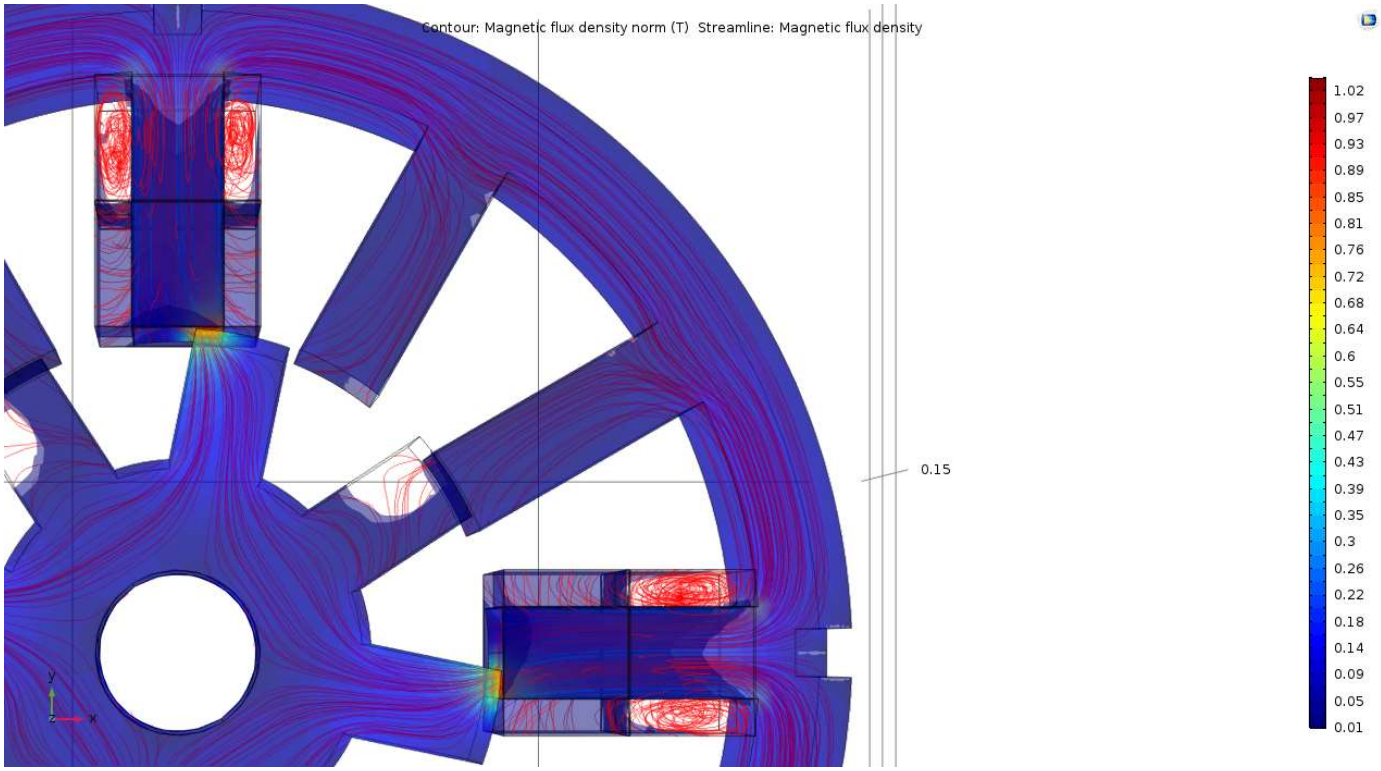

Fig7.2(a) Magnetic flux linkage Partial view for Quarter-Aligned Position

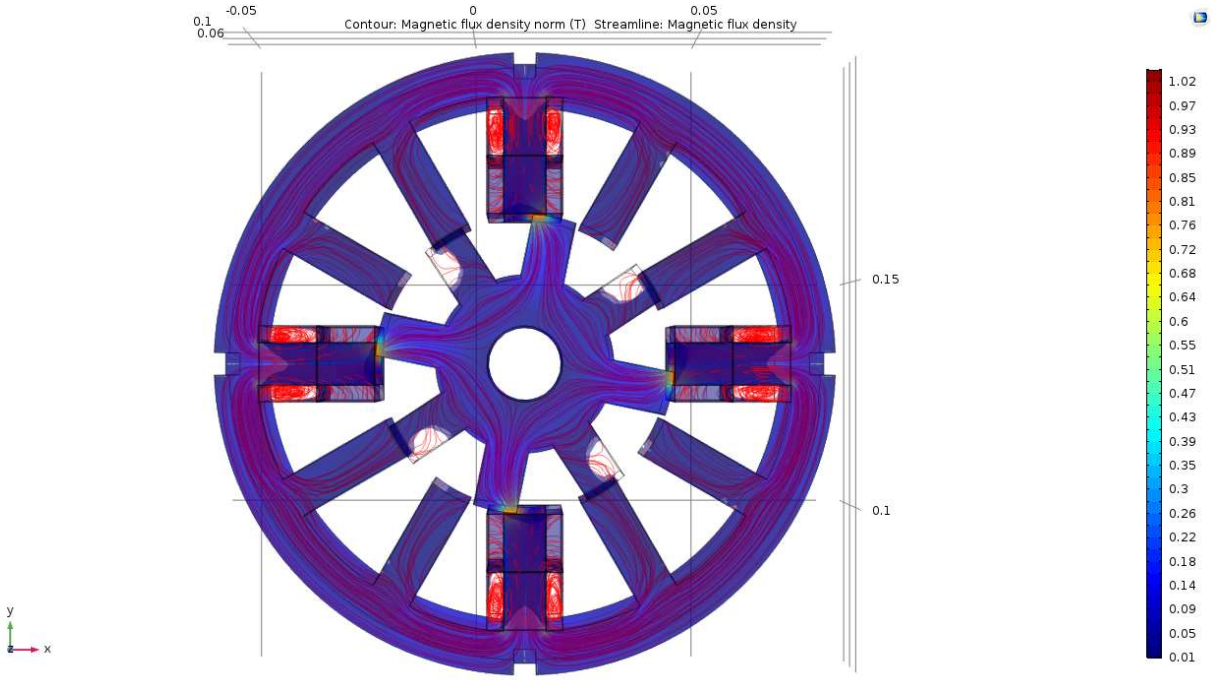

Fig7.2(b) Magnetic flux linkage Full view for Quarter-Aligned Position

7.3 Half Aligned Position

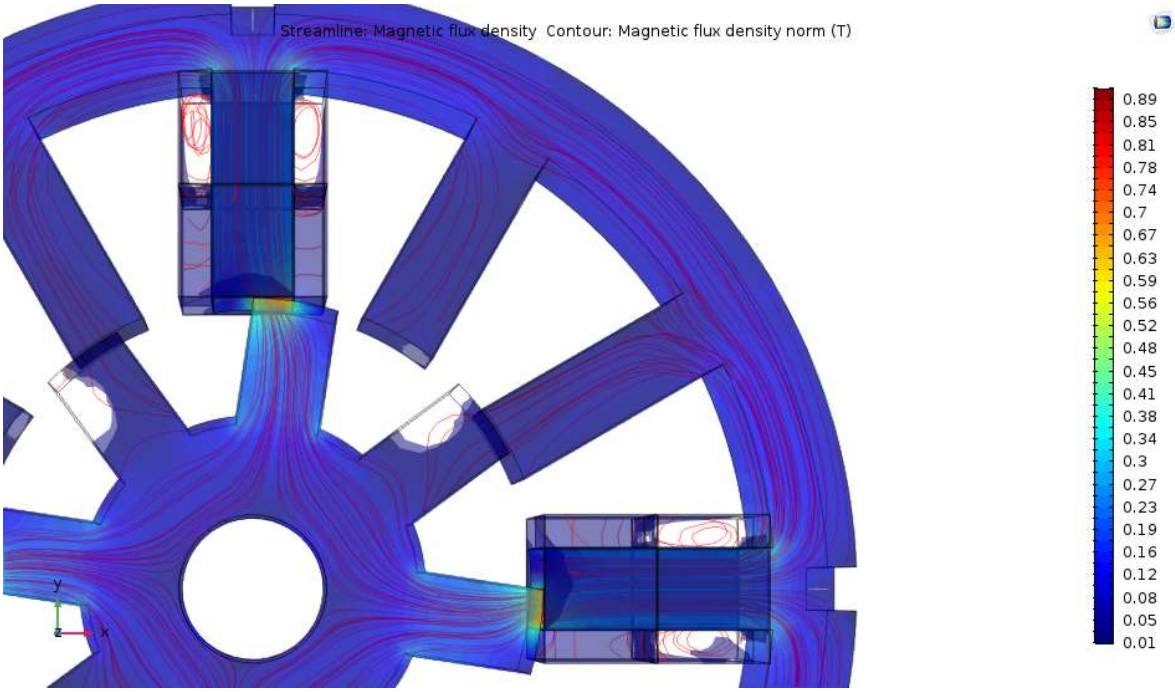

Fig7.3(a) Magnetic flux linkage Partial view for Half-Aligned Position

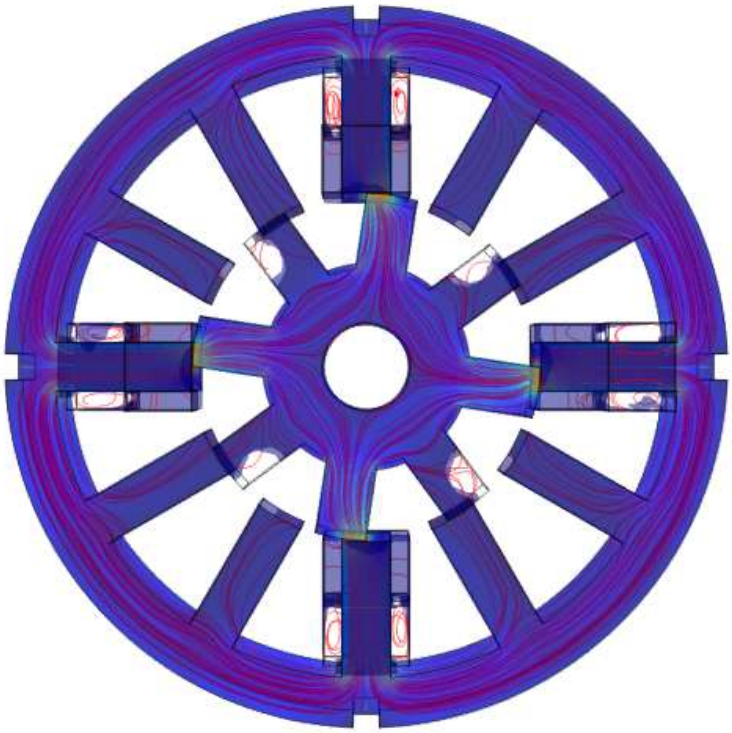

Fig7.3(b) Magnetic flux linkage Full view for Half-Aligned Position

7.4 Three-Quarter Aligned Position

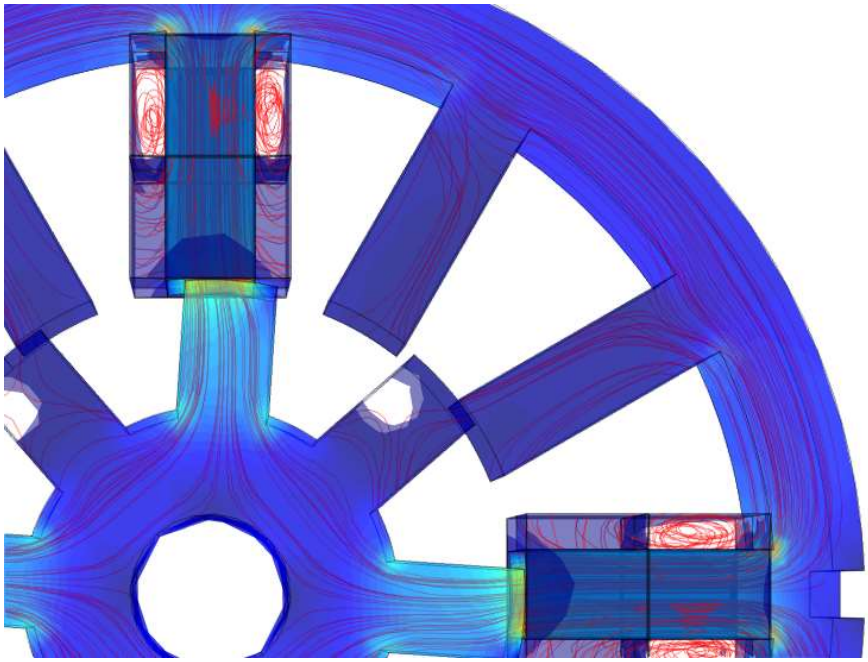

Fig7.4(a) Magnetic flux linkage Partial view for Three Quarter-Aligned Position

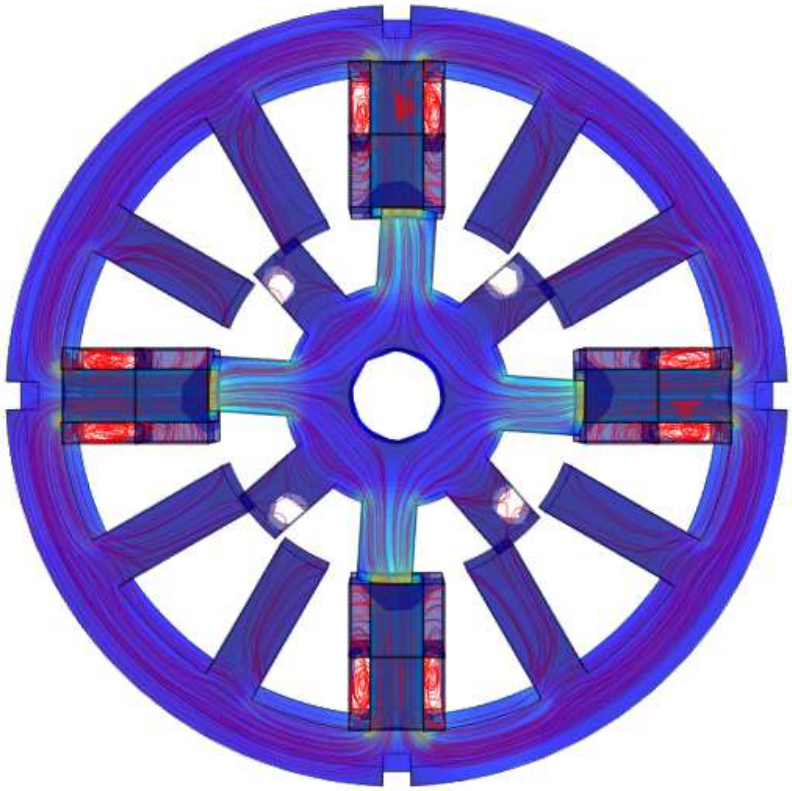

Fig7.4(b) Magnetic flux linkage Full view for Three Quarter-Aligned Position

7.5 Fully Aligned Position

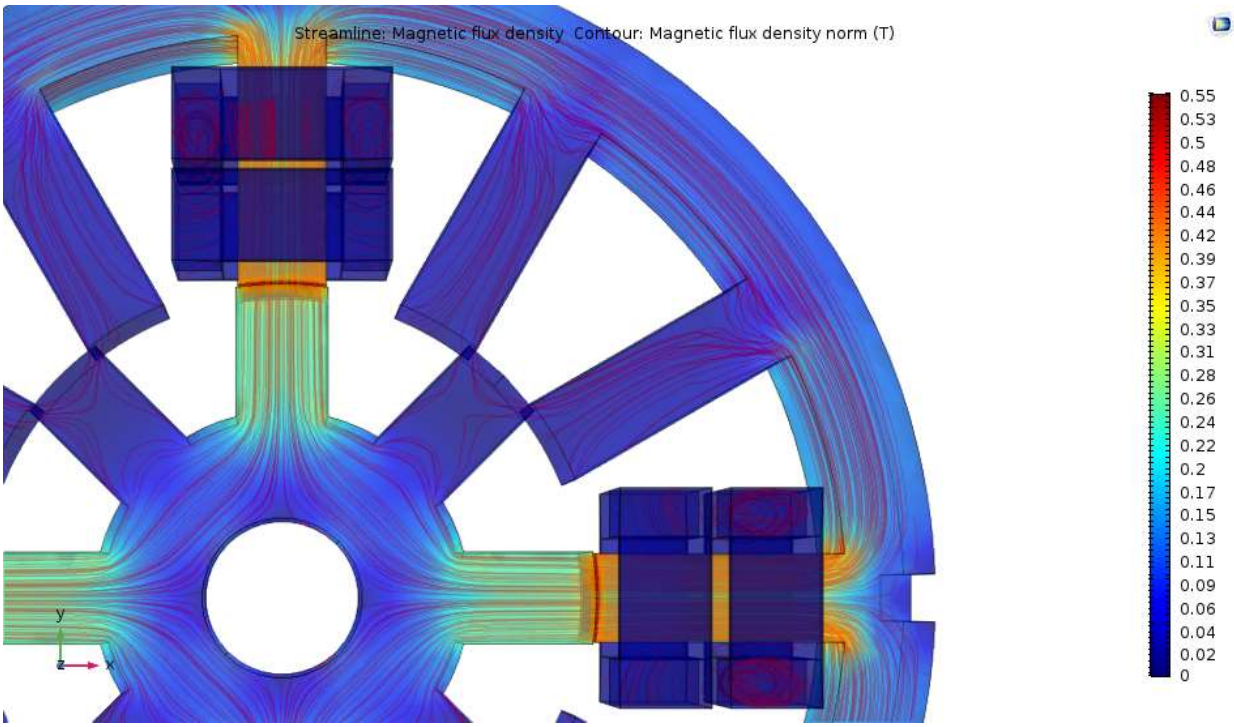

Fig7.5(a) Magnetic flux linkage Partial view for Fully-Aligned Position

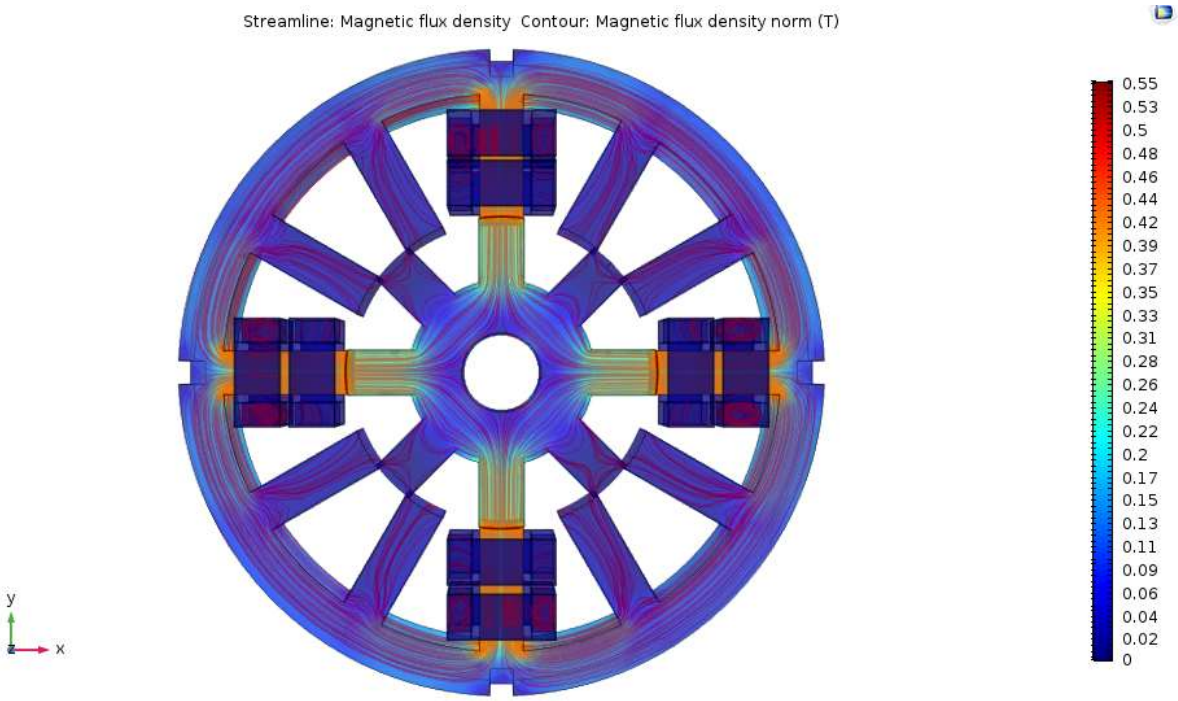

Fig7.5(b) Magnetic flux linkage Full view for Fully Aligned Position

Result: - Calculation of Average Torque and Power

Average work is given by W

$$W = W_{aligned} - W_{unaligned}$$

The aligned work $W_{aligned}$ is given by

$$W_{aligned} = \delta i(\lambda_1 + \lambda_2 + \lambda_3 + ... + \lambda_{n-1}) + \frac{\lambda_n \delta i}{2}$$

$$= 2(0.00975 + 0.01963 + 0.03944 + 0.05931 + 0.07913) + \frac{0.09813 * 2}{2}$$

$$= 0.51265\text{J}$$

The unaligned work $W_{unaligned}$ is given by

$$W_{unaligned} = \frac{1}{2} i_p \lambda_u = \frac{1}{2} i_p^2 L_u = \frac{1}{2} 10^2 \cdot 0.002306 = 0.1153J$$

The average torque is given by

$$T_{av} = \frac{W N_s N_r}{4\pi} = \frac{(0.51265 - 0.1153) \cdot 12 \cdot 10}{4\pi} = 4.55329 Nm$$

Since the average torque calculated above is slightly more than the required torque, no more redesign is required.

$$P = \omega \cdot T_{av} = \frac{1500 * 2\pi}{60} \cdot 4.55329 = 715.23W$$

Conclusion:-

A prototype machine developed in Solidworks Simulation 2019 software as an example of the design process analysis of a Switched Reluctance Motor and for each angular alignment of the rotor with the corresponding stator is been verified using comsol multiphysics 5.2 software and the torque value obtained is about 4.75Nm at the power rating of 750W are thus verified using analytical calculations on MATLAB R2018a Software.

References

[1] Krishnan, R. "*Switcher Reluctance Motor Drives: Modeling, Simulation, Analysis, Design, and Applications*" fellow IEEE-Transactions on Magnetics, Virginia Tech, 1985.

[2] Praveen Vijayraghavan. "*Design of Switched Reluctance Motors and Development of a Universal Controller for Switched Reluctance and Permanent Magnet Brushless DC Motor Drives*" Faculty of the Virginia Polytechnic Institute, November 15,2001

[3] Diagramming of figures by Microsoft Visio Premium 2010

[4] "Switched Reluctance Motor" Diagram's `https://www.semanticscholar.org/paper/3.-Switched-Reluctance-Motors-3.1-Introduction/d06e41aed56de3fe5af95019d18070813bb0413a

[5] Modelling and Analysis "COMSOL Multiphysics Reference Manual, version 5.2', COMSOL Inc. www.comsol.com

[6] Analytical calculations and Graphical Data using MATLAB R2018a, The Mathwork Inc.